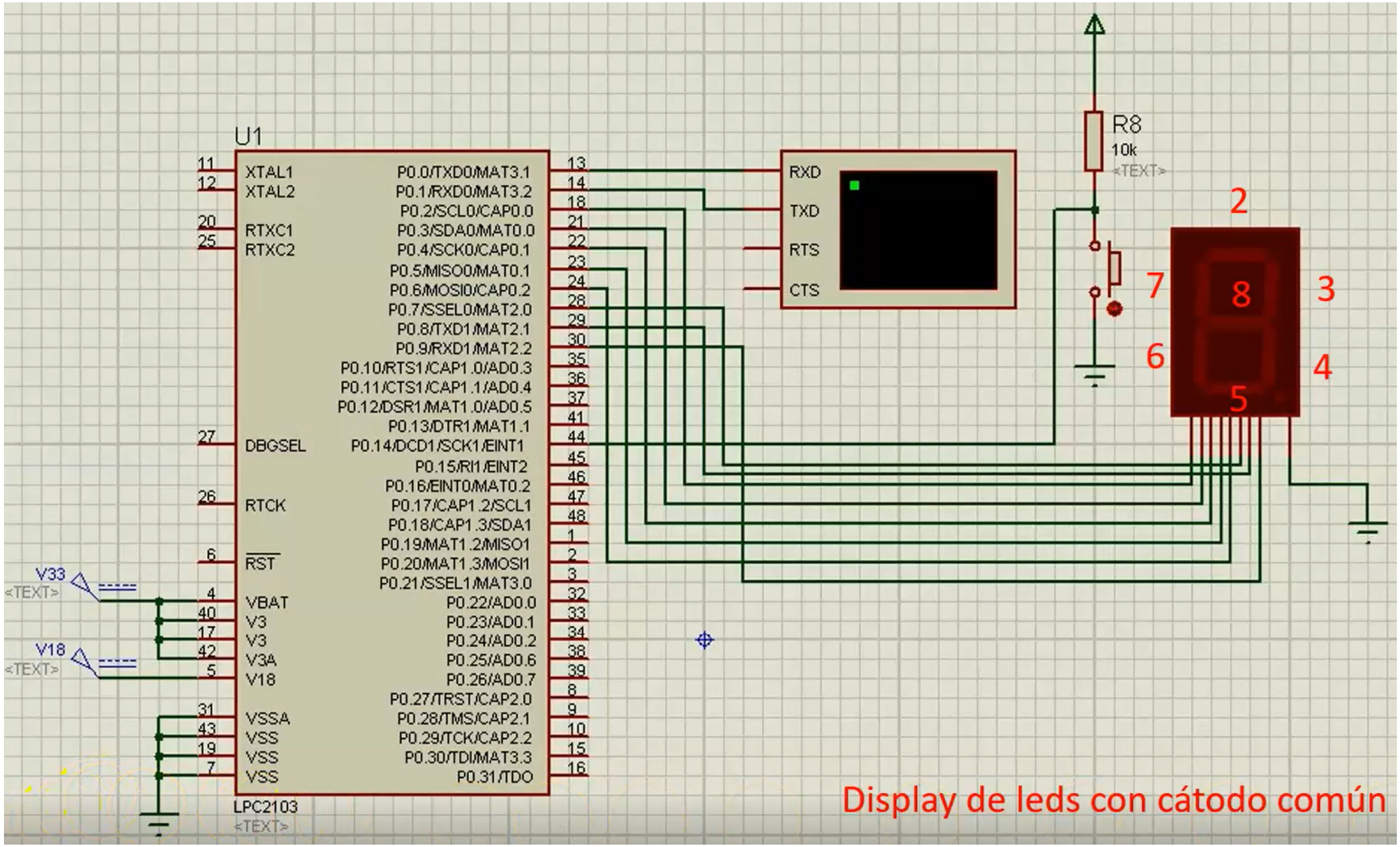
U1
XTAL1
XTAL2
RTXC1
RTXC2
DBGSEL
RTCK
RST
VBAT
V3
V3
V3A
V18
VSSA
VSS
VSS
VSS
P0.0/TXD0/MAT3.1
P0.1/RXD0/MAT3.2
P0.2/SCL0/CAP0.0
P0.3/SDA0/MAT0.0
P0.4/SCK0/CAP0.1
P0.5/MISO0/MAT0.1
P0.6/MOSI0/CAP0.2
P0.7/SSEL0/MAT2.0
P0.8/TXD1/MAT2.1
P0.9/RXD1/MAT2.2
P0.10/RTS1/CAP1.0/AD0.3
P0.11/CTS1/CAP1.1/AD0.4
P0.12/DSR1/MAT1.0/AD0.5
P0.13/DTR1/MAT1.1
P0.14/DCD1/SCK1/EINT1
P0.15/RI1/EINT2
P0.16/EINT0/MAT0.2
P0.17/CAP1.2/SCL1
P0.18/CAP1.3/SDA1
P0.19/MAT1.2/MISO1
P0.20/MAT1.3/MOSI1
P0.21/SSEL1/MAT3.0
P0.22/AD0.0
P0.23/AD0.1
P0.24/AD0.2
P0.25/AD0.6
P0.26/AD0.7
P0.27/TRST/CAP2.0
P0.28/TMS/CAP2.1
P0.29/TCK/CAP2.2
P0.30/TDI/MAT3.3
P0.31/TDO
LPC2103
RXD
TXD
RTS
CTS
R8
10k
V33
V18
2
7
8
3
6
4
5
Display de leds con cátodo común

LPC2xxx. GPIO: pin diagram

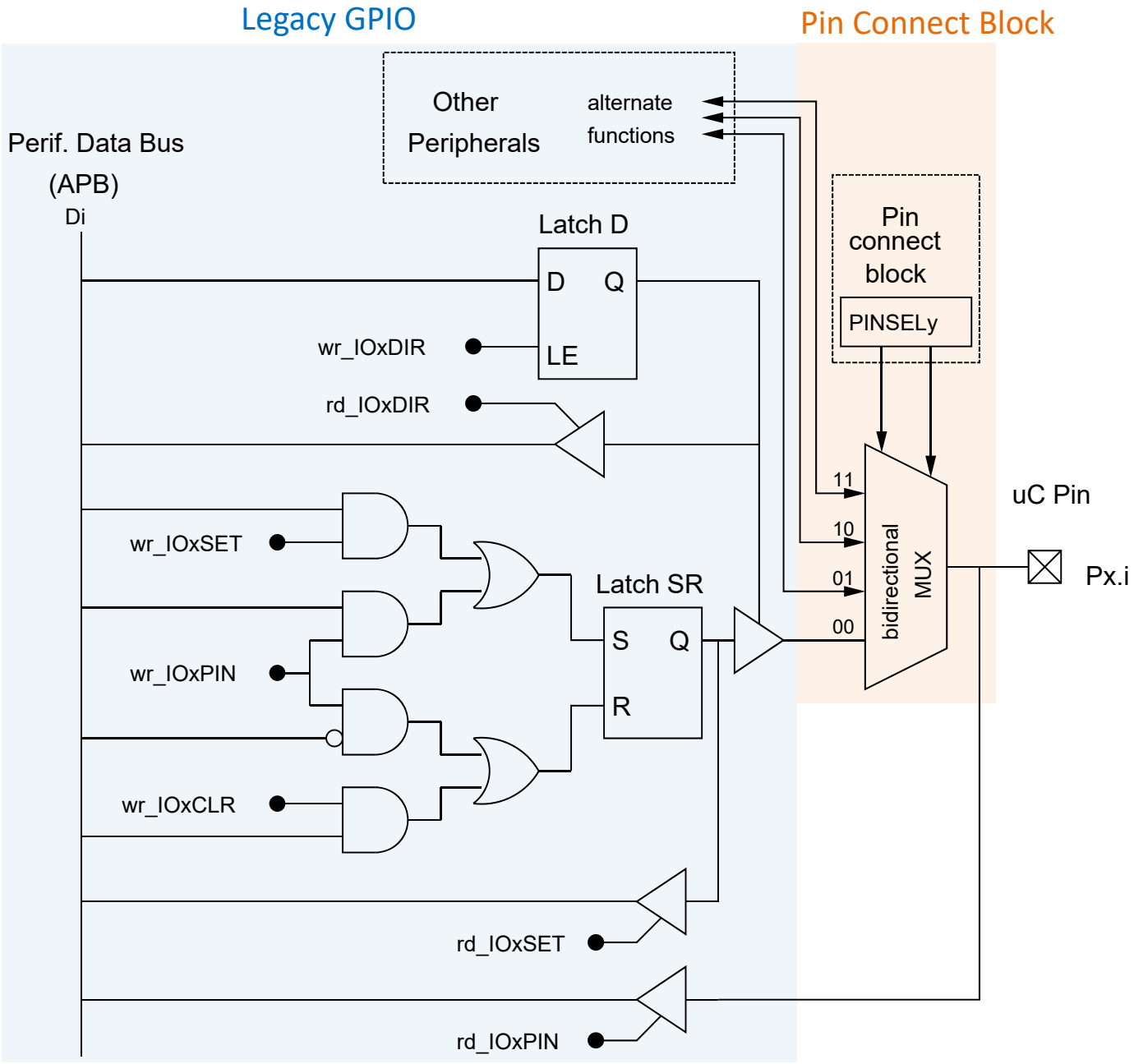

LPC2103 Pin Connect Block

- PINSELx registers select which peripheral is connected with each pin
- 2 bits per pin selects 4 possible connections:

PINSEL0 dir: 0xE002C000

31	30	29	28	27	26	25	24	23	22	21	20	19	18	17	16	15	14	13	12	11	10	9	8	7	6	5	4	3	2	1	0
Pin 15		Pin 14		Pin 13		Pin 12		Pin 11		Pin 10		Pin 9		Pin 8		Pin 7		Pin 6		Pin 5		Pin 4		Pin 3		Pin 2		Pin 1		Pin 0	

PINSEL1 dir: 0xE002C004

31	30	29	28	27	26	25	24	23	22	21	20	19	18	17	16	15	14	13	12	11	10	9	8	7	6	5	4	3	2	1	0
Pin 31		Pin 30		Pin 29		Pin 28		Pin 27		Pin 26		Pin 25		Pin 24		Pin 23		Pin 22		Pin 21		Pin 20		Pin 19		Pin 18		Pin 17		Pin 16	

- After reset all pins are selected as GPIO

LPC2103 Pin Connect Block. PINSEL0

PIN	Bits:	00	01	10	11
P0.0	1:0	GPIO	RXD0	MAT3.1	-
P0.1	3:2	GPIO	TXD0	MAT3.2	-
P0.2	5:4	GPIO	SCL0	CAP0.0	-
P0.3	7:6	GPIO	SDA0	MAT0.0	-
P0.4	9:8	GPIO	SCK0	CAP0.1	-
P0.5	11:10	GPIO	MISO0	MAT0.1	-
P0.6	13:12	GPIO	MOSI0	CAP0.2	-
P0.7	15:14	GPIO	SSEL0	MAT2.0	-
P0.8	17:16	GPIO	TXD1	MAT2.1	-
P0.9	19:18	GPIO	RXD1	MAT2.2	-
P0.10	21:20	GPIO	RTS1	CAP1.0	AD0.3
P0.11	23:22	GPIO	CTS1	CAP1.1	AD0.4
P0.12	25:24	GPIO	DSR1	MAT1.0	AD0.5
P0.13	27:26	GPIO	-	MAT1.1	DTR1
P0.14	29:28	GPIO	EINT1	SCK1	DCD1
P0.15	31:30	GPIO	EINT2	-	RI1

UART0
I2C0
SPI0
SPI1
UART1
A/D
Timers
Ext. INT

LPC2103 Pin Connect Block. PINSEL1

PIN	Bits:	00	01	10	11
P0.16	1:0	GPIO	EINT0	MAT0.2	-
P0.17	3:2	GPIO	SCL1	CAP1.2	-
P0.18	5:4	GPIO	SDA1	CAP1.3	-
P0.19	7:6	GPIO	MISO1	MAT1.2	-
P0.20	9:8	GPIO	MOSI1	MAT1.3	-
P0.21	11:10	GPIO	SSEL1	MAT3.0	-
P0.22	13:12	GPIO	-	-	AD0.0
P0.23	15:14	GPIO	-	-	AD0.1
P0.24	17:16	GPIO	-	-	AD0.2
P0.25	19:18	GPIO	-	-	AD0.6
P0.26	21:20	GPIO	-	-	AD0.7
P0.27	23:22	GPIO	TRST	CAP2.0	-
P0.28	25:24	GPIO	TMS	CAP2.1	-
P0.29	27:26	GPIO	TCK	CAP2.2	-
P0.30	29:28	GPIO	TDI	MAT3.3	-
P0.31	31:30	GPIO	TDO	-	-

I2C1
SPI1
A/D
Timers
Ext. INT
JTAG (debug)

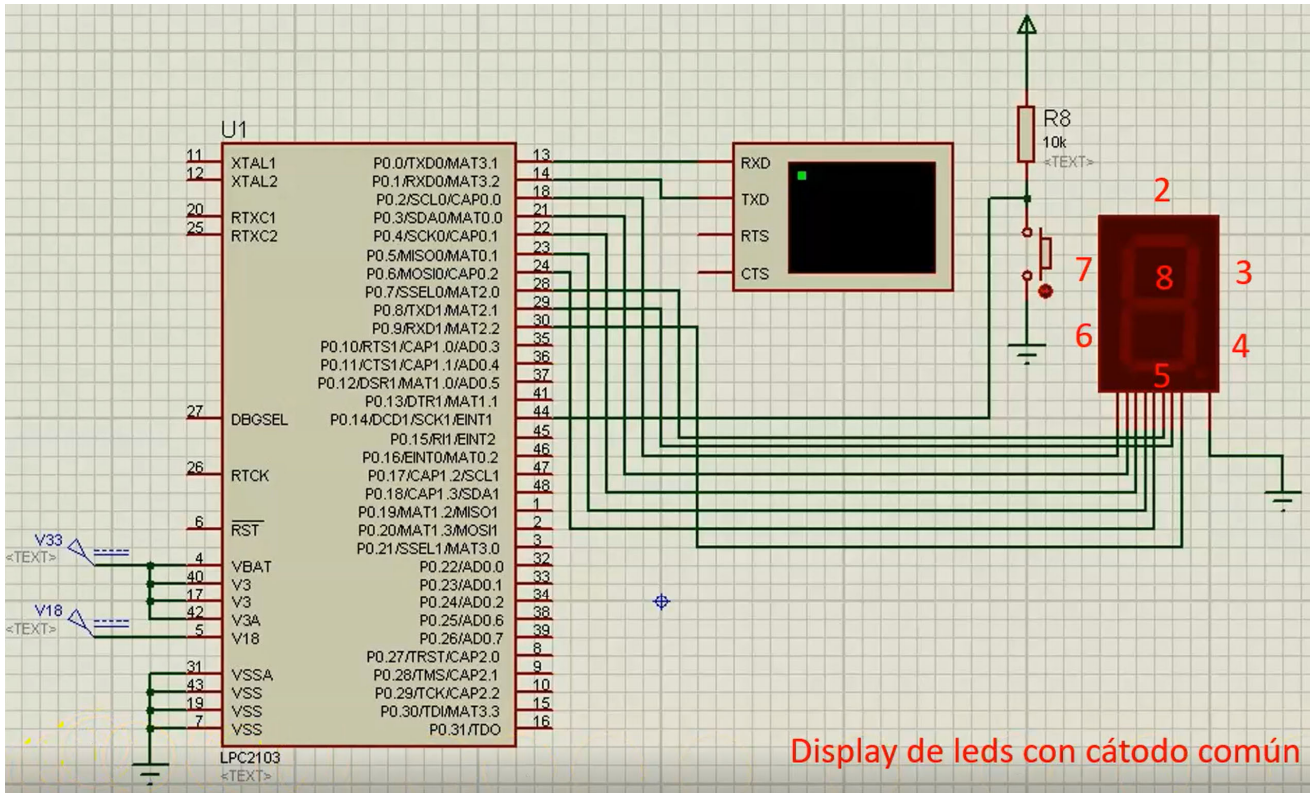

PINSEL0 dir: 0xE002C000

31	30	29	28	27	26	25	24	23	22	21	20	19	18	17	16	15	14	13	12	11	10	9	8	7	6	5	4	3	2	1	0	
0	0	0	0	0	0	0	0	0	0	0	0	0	0	0	0	0	0	0	0	0	0	0	0	0	0	0	0	0	1	0	1	→ 5

PINSEL1 dir: 0xE002C004

31	30	29	28	27	26	25	24	23	22	21	20	19	18	17	16	15	14	13	12	11	10	9	8	7	6	5	4	3	2	1	0	
0	0	0	0	0	0	0	0	0	0	0	0	0	0	0	0	0	0	0	0	0	0	0	0	0	0	0	0	0	0	0	0	→ 0

```
/*****************************************************************/
/*****************  Legacy GPIO configuration and 0 in display  *******************/
/*****************************************************************/
GPIO_conf:  ldr   r0, =0xE002C000    @ r0 points to PINSEL0
            mov   r1, #5             @ Legacy GPIO except pins 0-1 UART0
            str   r1, [r0], #4       @ Write PINSEL0. Now r0 points to PINSEL1
            mov   r1, #0
            str   r1, [r0]           @ Write PINSEL1
```

LPC2xxx. GPIO: pin diagram

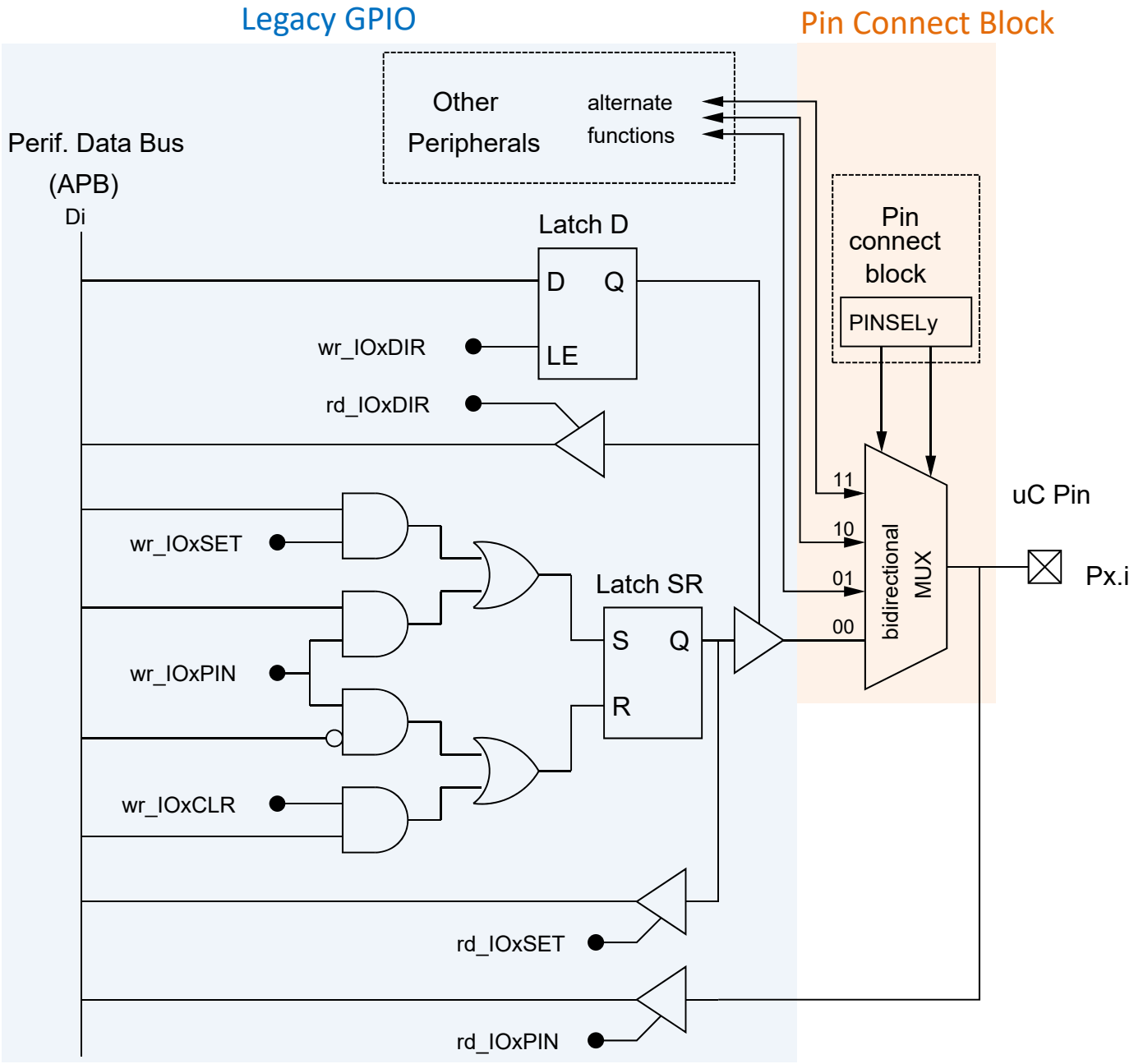

LPC2xxx GPIO. Registers

- Registers (32-bit, one bit per pin)
  - IOxDIR (rw): Pin direction (dir: 0xE0028008)

    0: Input 1: Output
  - IOxPIN (rw): Pin Value (dir: 0xE0028000)

    Read: The bit reflects the logic level of the pin regardless of its direction or the function selected in Pin Connect Block

    Write: The level of the pin is changed to the written bit
  - IOxSET (rw): Pin Set (dir: 0xE0028004)

    Write: 1: Set pin (pin=1) 0: no action

    Read: The value of the output latch is returned
  - IOxCLR (wo): Pin Clear (dir: 0xE002800C)

    Write: 1: Clear pin (pin=0) 0: no action

  Only pins programmed as GPIO in the Pin Connect Block and as outputs in IOxDIR are actually changed by writes to IOxPIN, IOxSET and IOxCLR

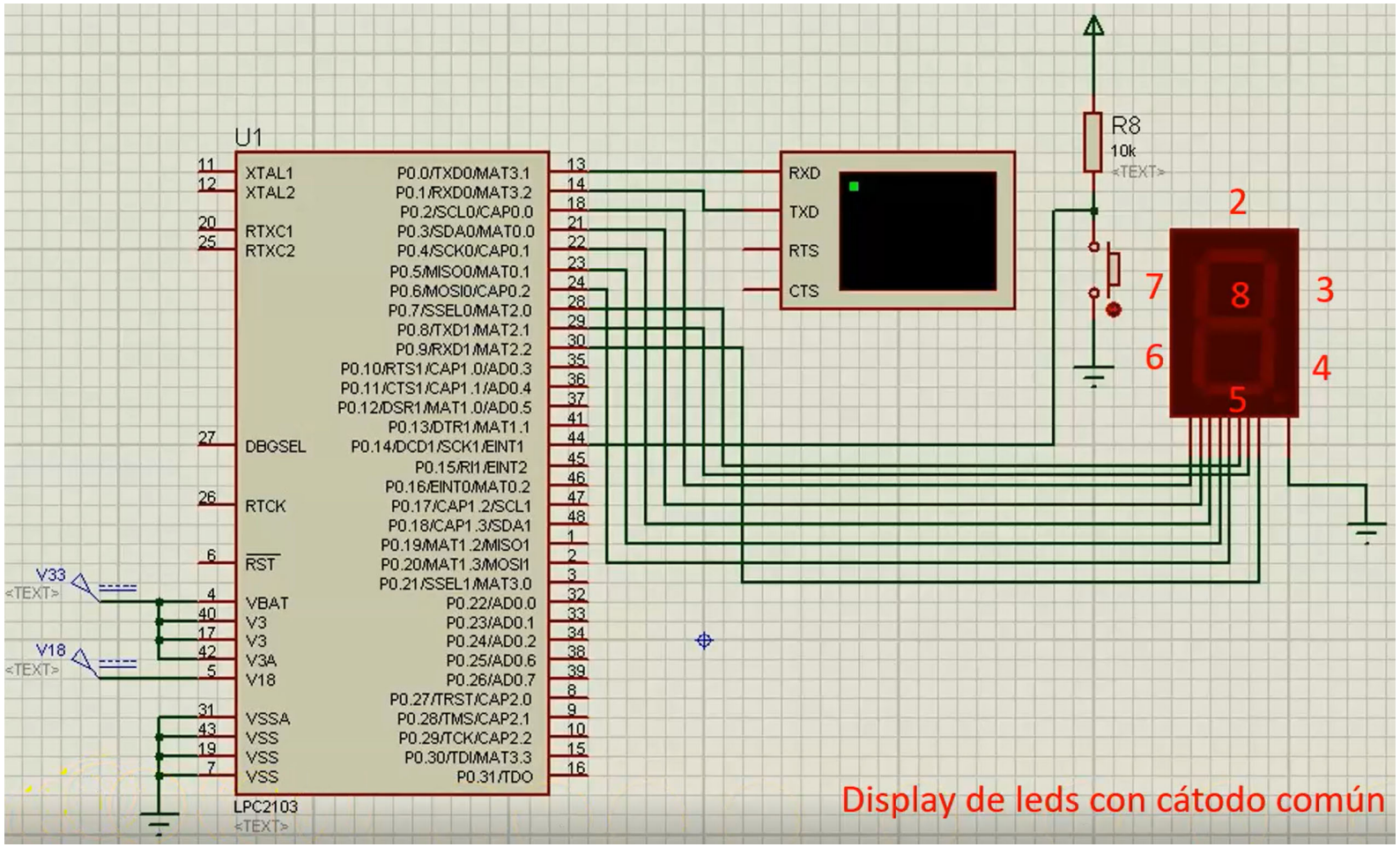

IOxDIR dir: 0xE0028008

31	30	29	28	27	26	25	24	23	22	21	20	19	18	17	16	15	14	13	12	11	10	9	8	7	6	5	4	3	2	1	0
0	0	0	0	0	0	0	0	0	0	0	0	0	0	0	0	0	0	0	0	0	0	0	1	1	1	1	1	1	1	0	0
0		0		0		0		0		0		1		F		C															

```
/*****************************************************************/
/*****************  Legacy GPIO configuration and 0 in display  *******************/
/*****************************************************************/
GPIO_conf:  ldr   r0, =0xE002C000    @ r0 points to PINSEL0
            mov   r1, #5             @ Legacy GPIO except pins 0-1 UART0
            str   r1, [r0], #4       @ Write PINSEL0. Now r0 points to PINSEL1
            mov   r1, #0
            str   r1, [r0]           @ Write PINSEL1

            ldr   r0, =0xE0028000    @ r0 points to IOxPIN
            mov   r1, #0x000001FC    @ Pins 2-8 are outputs
            str   r1, [r0, #8]       @ Writing IOxDIR
```

LPC2xxx. GPIO: pin diagram

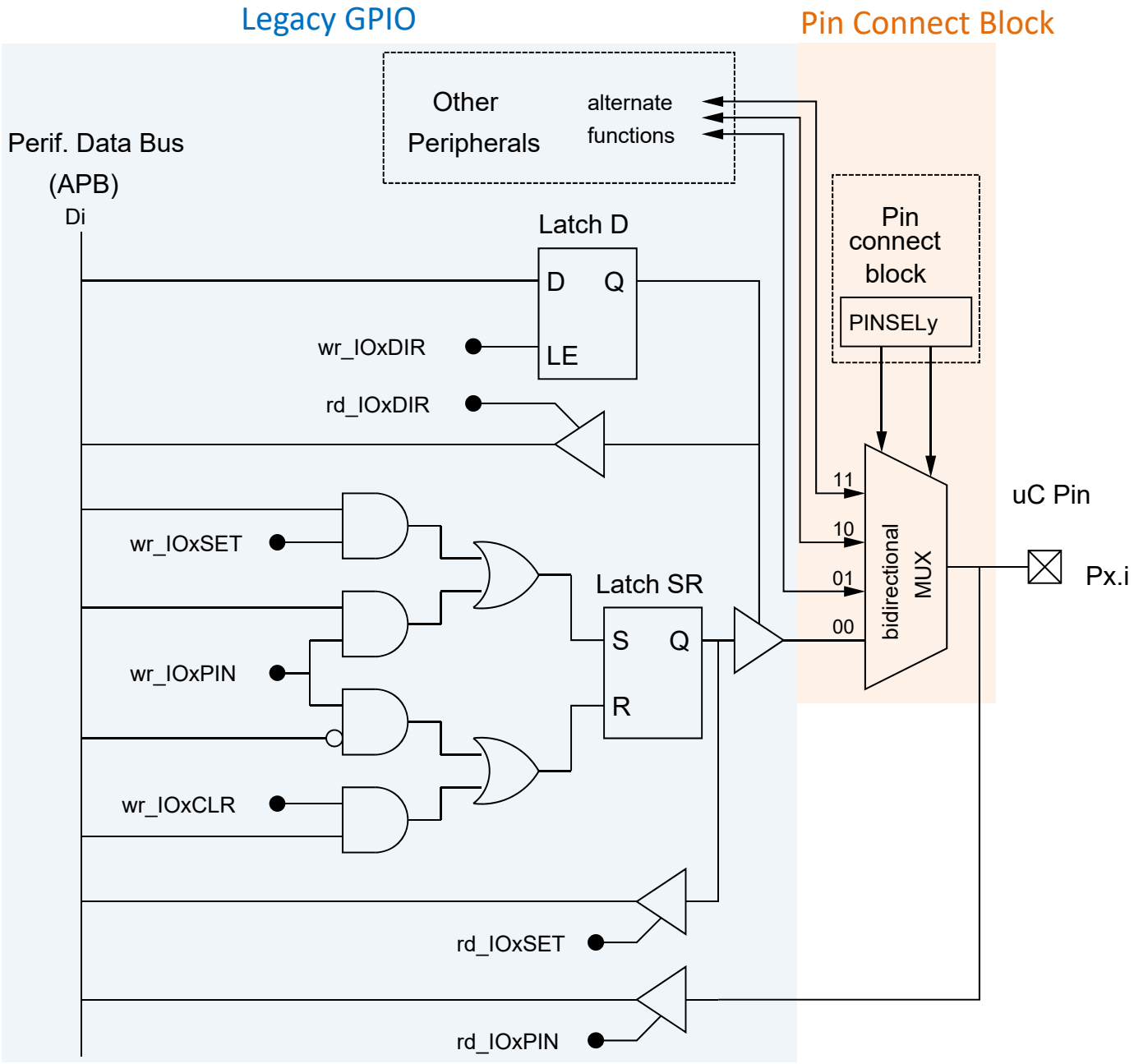

LPC2xxx GPIO. Registers

- Registers (32-bit, one bit per pin)
  - IOxDIR (rw): Pin direction (dir: 0xE0028008)

    0: Input 1: Output
  - IOxPIN (rw): Pin Value (dir: 0xE0028000)

    Read: The bit reflects the logic level of the pin regardless of its direction or the function selected in Pin Connect Block

    Write: The level of the pin is changed to the written bit
  - IOxSET (rw): Pin Set (dir: 0xE0028004)

    Write: 1: Set pin (pin=1) 0: no action

    Read: The value of the output latch is returned
  - IOxCLR (wo): Pin Clear (dir: 0xE002800C)

    Write: 1: Clear pin (pin=0) 0: no action

  Only pins programmed as GPIO in the Pin Connect Block and as outputs in IOxDIR are actually changed by writes to IOxPIN, IOxSET and IOxCLR

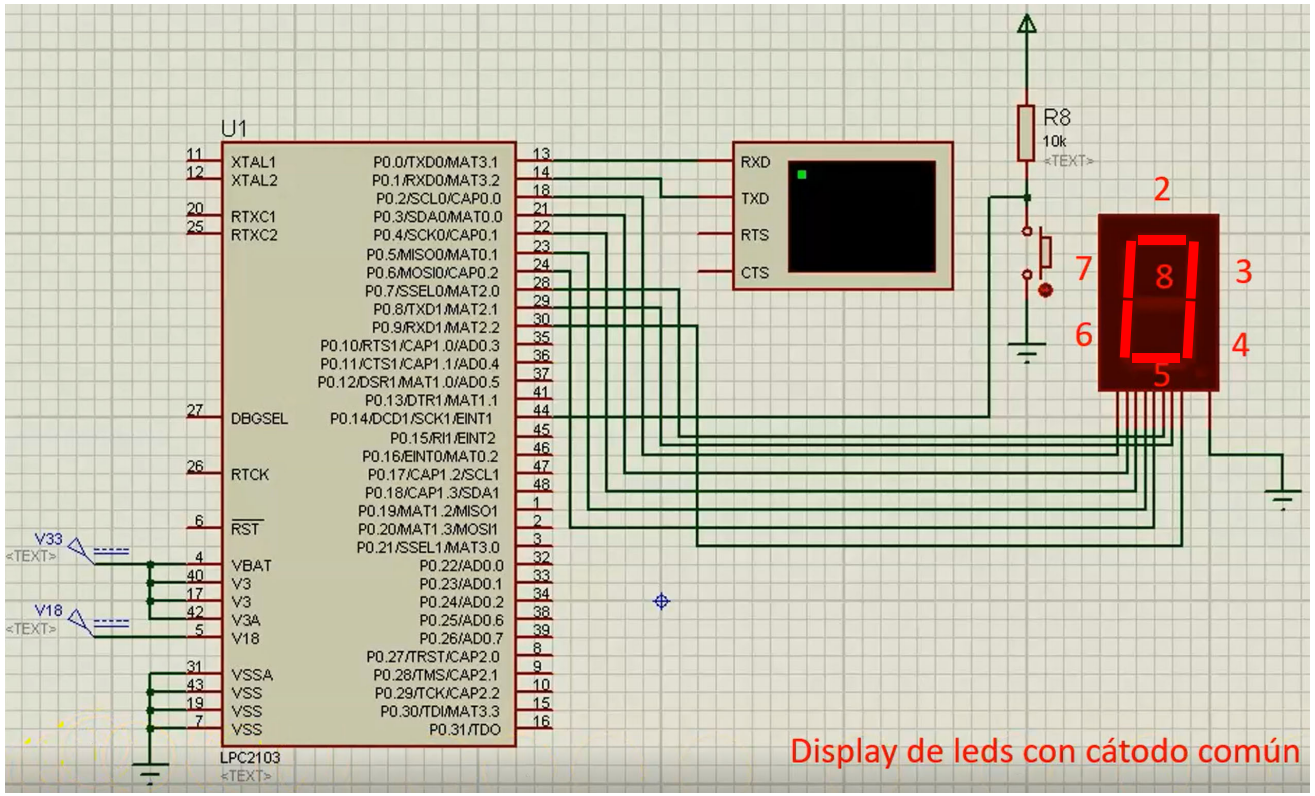

IOxSET

dir:

0xE0028004

31	30	29	28	27	26	25	24	23	22	21	20	19	18	17	16	15	14	13	12	11	10	9	8	7	6	5	4	3	2	1	0
0	0	0	0	0	0	0	0	0	0	0	0	0	0	0	0	0	0	0	0	0	0	0	0	1	1	1	1	1	1	0	0
0				0				0				0				0				0				F				C			

IOxCLEAR

dir:

0xE002800C

31	30	29	28	27	26	25	24	23	22	21	20	19	18	17	16	15	14	13	12	11	10	9	8	7	6	5	4	3	2	1	0
0	0	0	0	0	0	0	0	0	0	0	0	0	0	0	0	0	0	0	0	0	0	0	1	0	0	0	0	0	0	0	0
0				0				0				0				0				0				0				0			

```
/*****************************************************************/
/*****************  Legacy GPIO configuration and 0 in display  *******************/
/*****************************************************************/

GPIO_conf:  ldr   r0, =0xE002C000    @ r0 points to PINSEL0
            mov   r1, #5             @ Legacy GPIO except pins 0-1 UART0
            str   r1, [r0], #4       @ Write PINSEL0. Now r0 points to PINSEL1
            mov   r1, #0
            str   r1, [r0]           @ Write PINSEL1

            ldr   r0, =0xE0028000    @ r0 points to IOxPIN
            mov   r1, #0x000001FC    @ Pins 2-8 are outputs
            str   r1, [r0, #8]       @ Writing IOxDIR

            mov   r1, #0x000000FC    @ Leds on - pins 2-7 are "1"
            str   r1, [r0, #4]       @ Writing IOxSET
            mov   r1, #0x00000100    @ Led off - pin 8 is "0"
            str   r1, [r0, #0xC]     @ Writing IOxCLR
```

LPC2xxx. GPIO: pin diagram

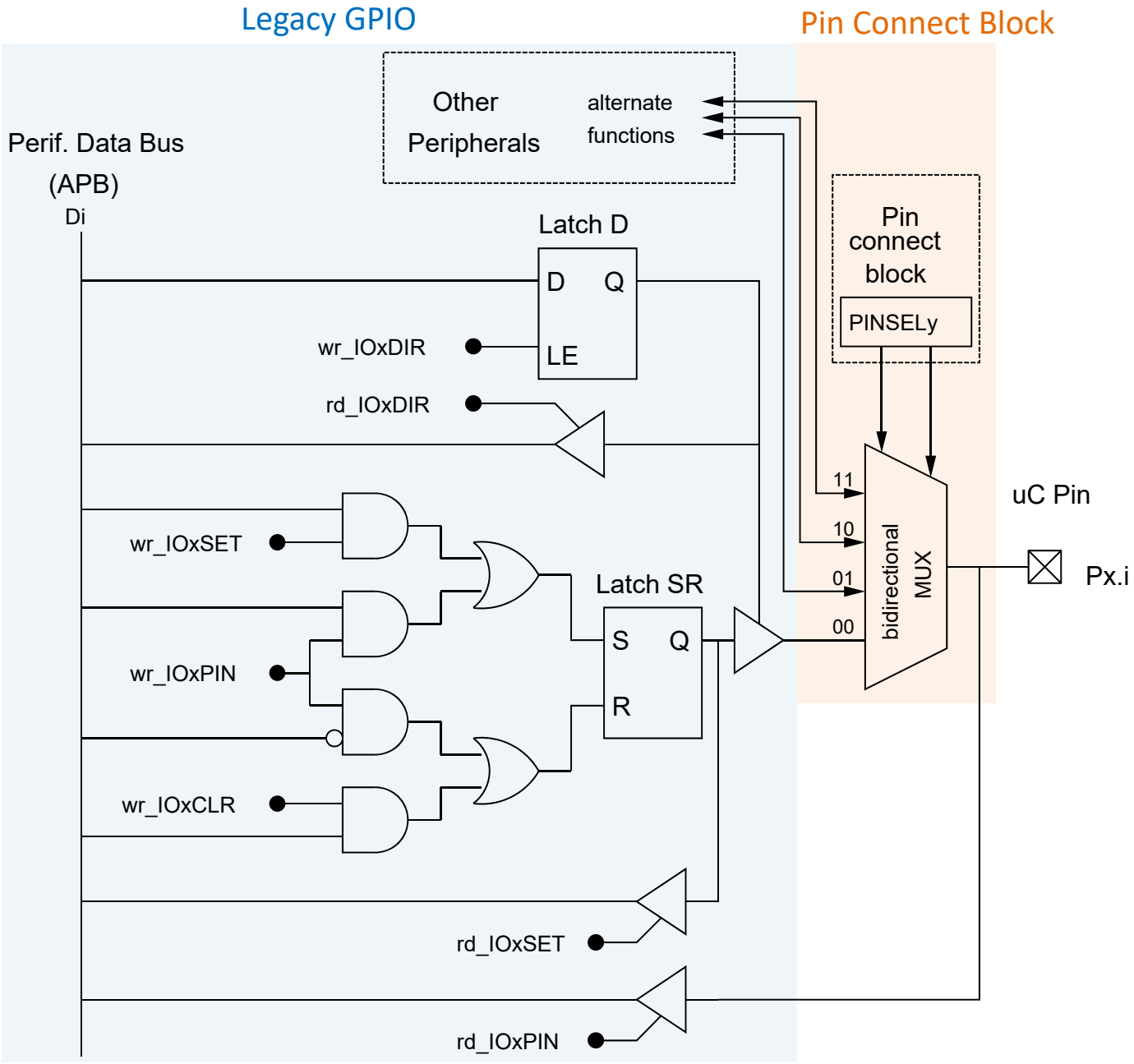

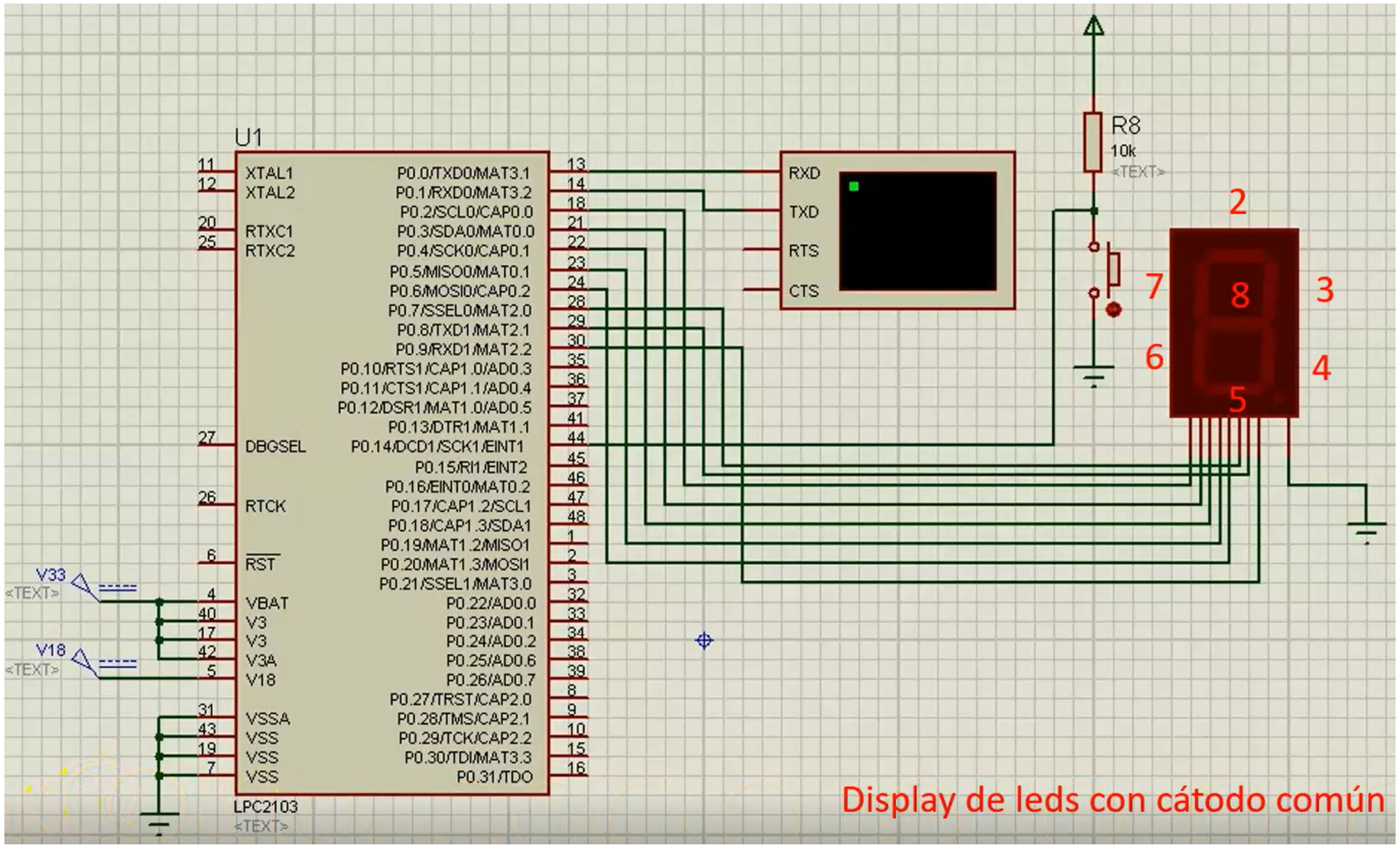

Máscara para leer los pines configurados como entradas:

31	30	29	28	27	26	25	24	23	22	21	20	19	18	17	16	15	14	13	12	11	10	9	8	7	6	5	4	3	2	1	0
1	1	1	1	1	1	1	1	1	1	1	1	1	1	1	1	1	1	1	1	1	1	1	0	0	0	0	0	0	0	0	0
F				F				F				F				F				E				0				0			

```
/*****************************************************************/
/*****************  Legacy GPIO configuration and 0 in display  ******************/
/*****************************************************************/
GPIO_conf: ldr   r0, =0xE002C000    @ r0 points to PINSEL0
           mov   r1, #5             @ Legacy GPIO except pins 0-1 UART0
           str   r1, [r0], #4       @ Write PINSEL0. Now r0 points to PINSEL1
           mov   r1, #0
           str   r1, [r0]           @ Write PINSEL1

           ldr   r0, =0xE0028000    @ r0 points to IOxPIN
           mov   r1, #0x000001FC    @ Pins 2-8 are outputs
           str   r1, [r0, #8]       @ Writing IOxDIR

           mov   r1, #0x000000FC    @ Leds on - pins 2-7 are "1"
           str   r1, [r0, #4]       @ Writing IOxSET
           mov   r1, #0x00000100    @ Led off - pin 8 is "0"
           str   r1, [r0, #0xC]     @ Writing IOxCLR

           ldr   r2, =0xFFFFFE00    @ r2 masks pin lecture
           ldr   r1, [r0]           @ Reading IOxPIN
           and   r1, r1, r2         @ Output pins are "0"
```